# Lancaster Table & Seating Industrial Bar Stool with Rustic Walnut Finish - Unassembled

#164BINKDRTWAL

Item #: 164BINKDRTWAL Qty: _____

Project: _____

Approval: _____ Date: _____

## Features

- Charming industrial style
- Solid wood seat, back, and legs with a rustic walnut finish
- Durable steel frame ensures a stable foundation
- Plastic glides protect floors from scratches and scuffs
- Contoured, rectangular back provides comfortable support

## Technical Data

| | |
|---|---|
| Width | 16 1/2 Inches |
| Depth | 16 1/2 Inches |
| Height | 43 Inches |
| Back Width | 15 Inches |
| Seat Width | 15 3/16 Inches |
| Seat Depth | 15 3/16 Inches |
| Back Height | 6 1/4 Inches |
| Height Style | Bar Height |
| Seat Height | 28 1/2 Inches |
| Arms | Without Arms |

© 2026 Lancaster Table & Seating

| Technical Data | |
|---|---|
| Assembly Options | Assembly Required |
| Back | With Back |
| Back Color | Brown |
| Capacity | 350 lb. |
| Design | Industrial |
| Features | Footrest |
| Finish | Rustic Walnut |
| Frame Color | Black<br>Brown |
| Frame Material | Metal<br>Steel<br>Wood |
| Padded Seat | Without Padded Seat |
| Product Line | Lancaster Table & Seating Industrial |
| Seat Color | Brown |
| Seat Material | Wood |
| Seat Type | Solid |
| Style | Industrial<br>Solid Back |
| Type | Stools |
| Usage | Indoor |

# Plan View

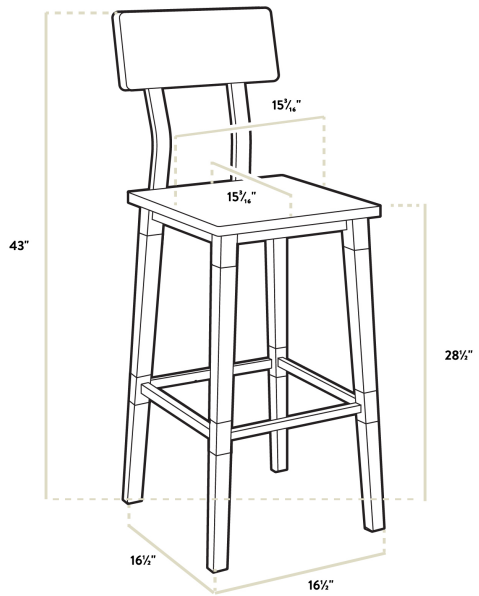


© 2026 Lancaster Table & Seating

# Notes & Details

Rural countryside meets urban city with this Lancaster Table & Seating industrial bar stool with rustic walnut finish! This bar stool's distressed finish and weathered texture combine with its sleek, square seat to add a rustic element with contemporary flair to your establishment. It features the natural look of wood with rugged metal accents for added visual appeal. At an ideal height for both bar and raised table seating, this bar stool is a versatile option for any brewery, winery, or restaurant.

This bar stool's sturdy steel frame provides unmatched durability in your dining room. It can hold up to 350 lb. of weight thanks to the metal frame and supports under the seat. The seat, back, and legs are made of solid beechwood, which stands up better to daily use and is able to better resist gouging and chipping compared to other types of wood. Plus, the rustic walnut finish offers the ultimate in style and is sure to complement the atmosphere of your establishment. This bar stool also features a rectangular back that's contoured to provide extra support to your customers' upper backs.

Foot rungs below the seat give customers a place to rest their legs. Each leg comes with an integrated glide to protect your floors from scuffing. Pair this bar stool with other Lancaster Table & Seating industrial chairs, bar stools, or tables (sold separately) to complete your dining space! This unit requires assembly.

© 2026 Lancaster Table & Seating