Lancaster Table & Seating Industrial Bar Stool with Bleached Oak Finish - Unassembled

#164BINKDBLOAK

Item #: 164BINKDBLOAK Qty: _____

Project: _____

Approval: _____ Date: _____

Features

- **Charming industrial style**
- **Solid wood seat, back, and legs with a bleached oak finish**
- **Durable steel frame ensures a stable foundation**
- **Plastic glides protect floors from scratches and scuffs**
- **Contoured, rectangular back provides comfortable support**

Technical Data	
Width	16 1/2 Inches
Depth	16 1/2 Inches
Height	43 Inches
Back Width	15 Inches
Seat Width	15 3/16 Inches
Seat Depth	15 3/16 Inches
Back Height	6 1/4 Inches
Height Style	Bar Height
Seat Height	28 1/2 Inches
Arms	Without Arms

© 2026 Lancaster Table & Seating

Technical Data	
Assembly Options	Assembly Required
Back	With Back
Back Color	Beige
Capacity	350 lb.
Design	Industrial
Features	Footrest
Finish	Bleached Oak
Frame Color	Beige Black
Frame Material	Metal Steel Wood
Padded Seat	Without Padded Seat
Product Line	Lancaster Table & Seating Industrial
Seat Color	Beige
Seat Material	Wood
Seat Type	Solid
Style	Industrial Solid Back
Type	Stools
Usage	Indoor

Plan View

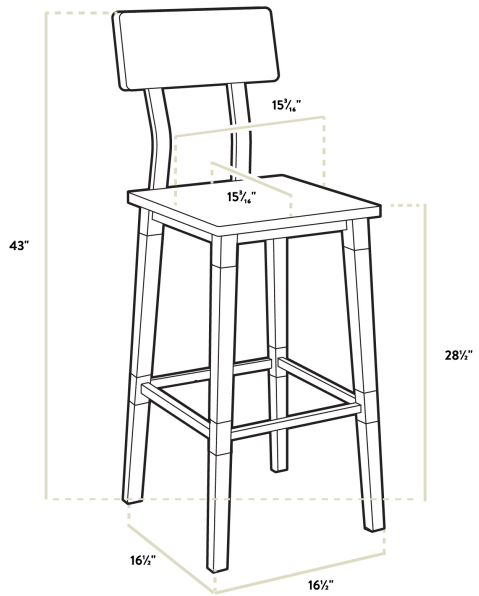

© 2026 Lancaster Table & Seating

Notes & Details

Rural countryside meets urban city with this Lancaster Table & Seating industrial bar stool with bleached oak finish! This bar stool's distressed finish and weathered texture combine with its sleek, square seat to add a rustic element with contemporary flair to your establishment. It features the natural look of wood with rugged metal accents for added visual appeal. At an ideal height for both bar and raised table seating, this bar stool is a versatile option for any brewery, winery, or restaurant.

This bar stool's sturdy steel frame provides unmatched durability in your dining room. It can hold up to 350 lb. of weight thanks to the metal frame and supports under the seat. The seat, back, and legs are made of solid beechwood, which stands up better to daily use and is able to better resist gouging and chipping compared to other types of wood. Plus, the bleached oak finish offers the ultimate in style and is sure to complement the atmosphere of your establishment. This bar stool also features a rectangular back that's contoured to provide extra support to your customers' upper backs.

Foot rungs below the seat give customers a place to rest their legs. Each leg comes with an integrated glide to protect your floors from scuffing. Pair this bar stool with other Lancaster Table & Seating industrial chairs, bar stools, or tables (sold separately) to complete your dining space! This unit requires assembly.

© 2026 Lancaster Table & Seating