NOTE:

- **COVER LAMINATE ON THE TOP OF LARGE TABLE, SMALL TABLE AND THE TOPPER**
- **LAMINATE SPEC - WILSONART 10745-60 FONTHILL PEAR**

ITEM NO.	QTY.	PART NO.	DESCRIPTION
1	1	LG TABLE	36" X 36" X 30"(H) TABLE
2	2	SM TABLE	26" X 14" X 21"(H) TABLE
3	1	TOPPER ASSY	21" X 21" X 9"(H) ASSEMBLY
4	2	ZC010	1/4-20 X 1 1/4" HEX HD. BOLT
5	2	.25-20 WASHER	5/16" I.D. X 3/4" O.D. WASHER

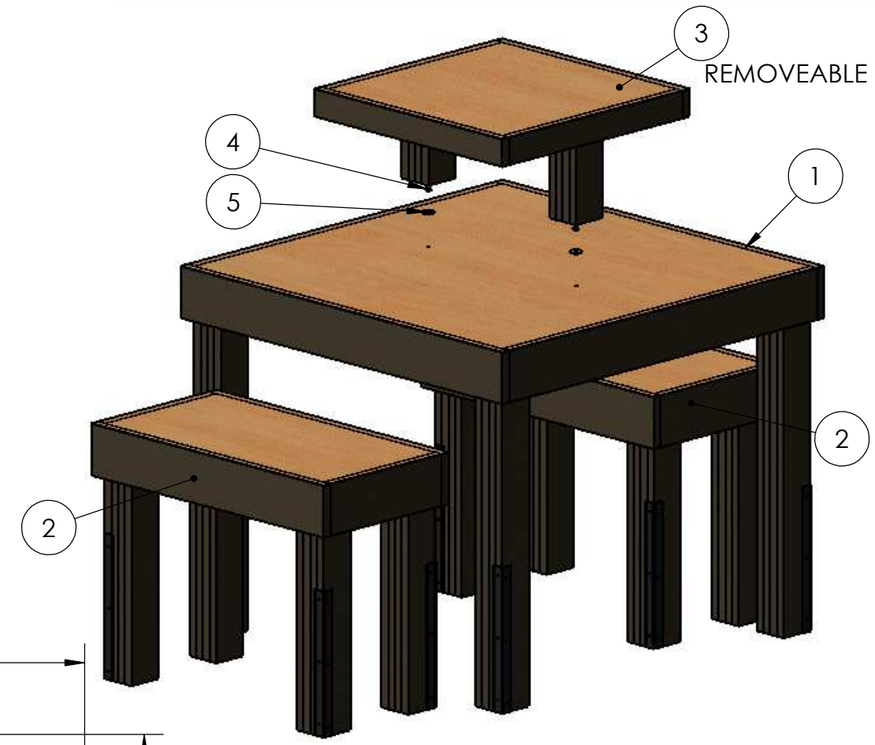

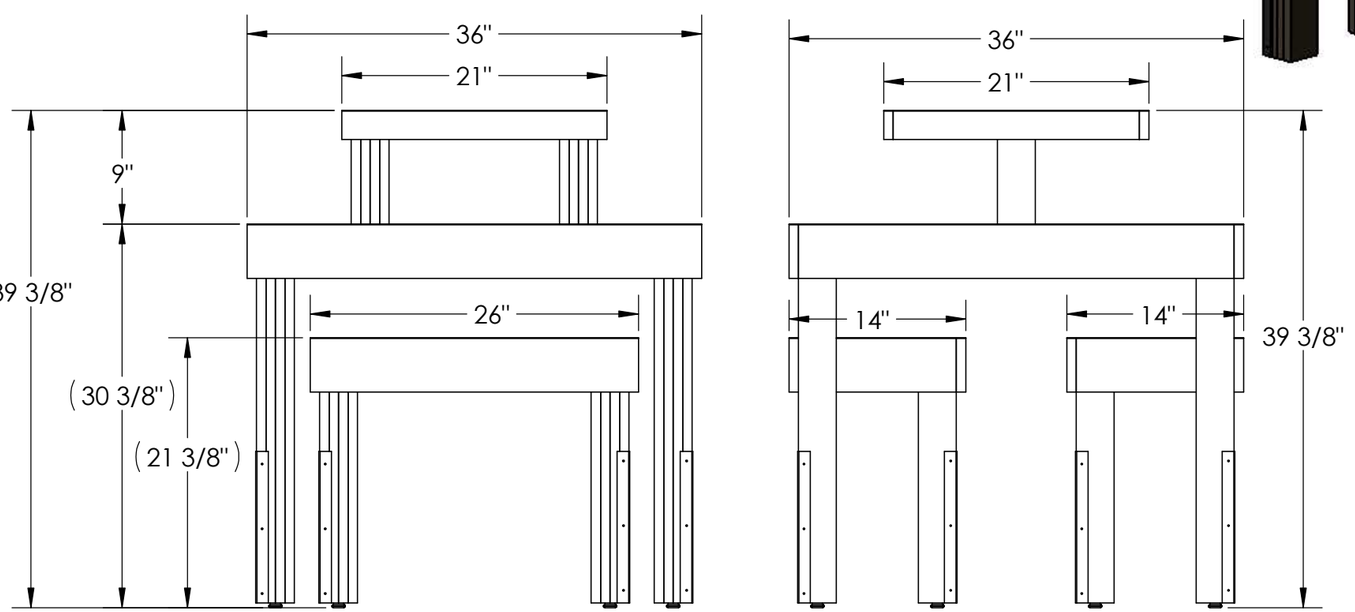

MARCO
3209 Marquita Drive
Fort Worth, Texas 76116
PH: (817) 244-8300

DWG# **33168**	REV. **A**
ITEM(S) **NT-124 SET LAM**	
DWG TYPE: **CONCEPT**	
TITLE: **THREE PIECES NESTING TABLE SET**	
MATERIAL: **PINE WOOD**	
FINISH: **SEE ORDER**	
DRAWN BY: **TN**	DATE **2/3/2017**
CHECKED BY:	DATE
APPROVED BY: **MIKE B.**	DATE **2/7/2017**
APPROVED BY:	DATE
RELEASE FOR PRODUCTION	DATE
USED ON:	
SCALE: 1:12	**SHEET # 1 OF 6**
SIZE: **B**	**TITLE BLOCK: TB-2008**
DRAWN ON: **SOLIDWORKS**	

UNLESS OTHERWISE SPECIFIED DIMENSIONS ARE IN INCHES AND TOLERANCES ARE:

FRACTIONS	DECIMALS	ANGLES
±1/16"	.X ±.060	±1°
	.XX ±.030	
	.XXX ±.015	

THIS DOCUMENT CONTAINS INFORMATION PROPRIETARY AND CONFIDENTIAL TO THE MARCO COMPANY AND MAY NOT BE REPRODUCED, PUBLISHED, OR DISTRIBUTED IN ANY FORM OR DISCLOSED IN WHOLE OR IN PART WITHOUT THE AUTHORIZATION OF THE MARCO COMPANY. ALL RIGHTS RESERVED, COPYRIGHT 2007 THE MARCO COMPANY.

DO NOT SCALE DRAWING