#SL22646 Dark Brown Sling Chaise Lounger

outdoor Interiors

bringing style and solutions to your patio & garden

STOP! PLEASE READ FIRST:

Thank you for purchasing this item from Outdoor Interiors. Please verify all the hardware and components are included as you unpack the carton. Place the items in a safe area to avoid loss and damaging contents. Use a soft area or the empty box to assemble the item.

ASSEMBLY TIPS: Never over-tighten any screws or bolts. It's best to assemble with 2 people. Never fully tighten any bolt/screw until all are inserted on each side and then tighten. Please visit our website if you have any question **www.outdoorinteriors.com** Please review the "PLEASE OIL ME" card for how to care & maintain your new furniture. Thanks, enjoy!
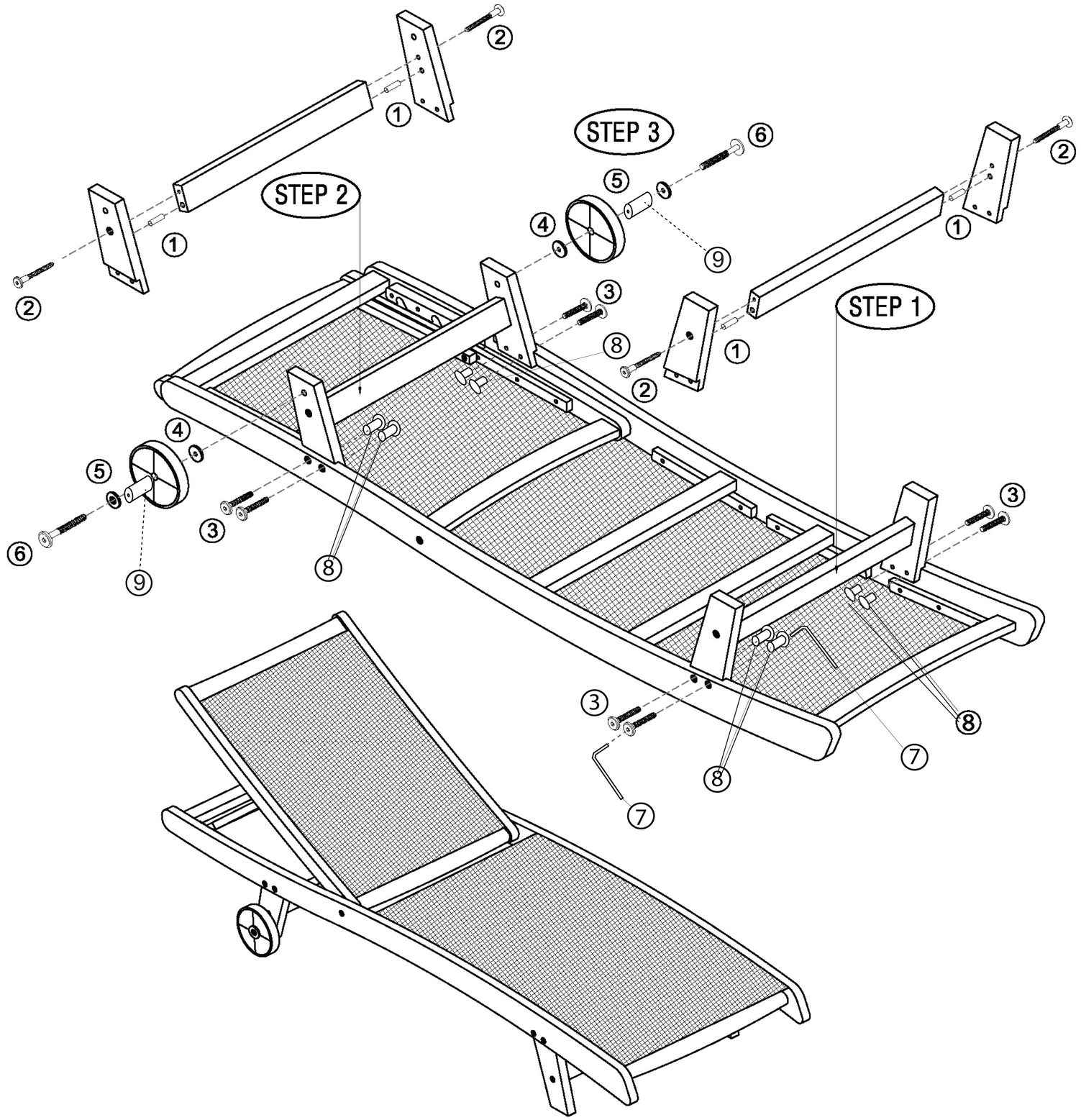
NO.	HARDWARE LIST	QTY.
1	Wooden dowel 10x40 mm	4 PCS
2	Screw M7 x 60 mm	4 PCS
3	Bolt M6 x 30 mm	8 PCS
4	Washer 8 x 30 mm	2 PCS
5	Washer 8 x 35 mm	2 PCS
6	Bolt M8 x 55 mm	2 PCS
7	Allen Key 4 x 98 mm	2PCS
8	Leg Fastener 6 x 13mm	8 PCS
9	Wooden dowel 24 x 25mm	2 PCS
10	Portable Drill Bit	1 PC