EQUIPMENT AVANTCO

User Manual

09/2026

Potato Peelers

Countertop Model:

#177PPC22 22 lb. Capacity

Floor Model:

#177PPF40 40 lb. Capacity

Warning:

Improper installation, adjustment, alteration, service, or maintenance can cause property damage, injury, or death. Read the installation, operating, and maintenance instructions thoroughly before installing or servicing this equipment.

For Your Safety:

Do not store or use gasoline or other flammable vapors or liquids in the vicinity of this or any other appliance.

Note:

Please read and keep these instructions. Indoor use only.

www.AvantcoEquipment.com

Table of Contents

Specifications 2
Safety Precautions 3
Parts Identification 4
Installation 5
Controls 6
Operation 6
Cleaning & Maintenance 7
Troubleshooting 8
Circuit Diagram 8

Specifications

Model	177PPC22	177PPF40
Capacity	22 lb.	40 lb.
Voltage	120V	120V
Wattage	750W	1100W
Horsepower	1 HP	1 1/2 HP
Hertz	60 Hz	60 Hz
Dimensions	24"L x 21¼"W x 26½"H	24"L x 21¼"W x 39¼"H

NEMA
5-15P

Safety Precautions

⚠ WARNING

- Read all instructions carefully and completely.
- For commercial use only.
- For indoor use only.
- Only connect the appliance to an electrical outlet with the voltage and frequency mentioned on the serial plate.
- This machine is intended to peel potatoes and garlic ONLY and is NOT intended to peel any other vegetables or fruits, or to remove mussel shells or fish scales. Any other use may lead to damage of the machine or property, or personal injury, and will void the warranty.
- Protect against electrical shock by keeping all cords, plugs, and other electrical components away from water or other liquids.
- Unplug this unit when not in use and before cleaning.
- DO NOT operate this unit or any appliance with a damaged electrical cord or plug.
- DO NOT operate this or any appliance after it has malfunctioned or has been damaged in any way.
- DO NOT use outdoors.
- DO NOT reach into the machine while it is running.
- Disconnect the unit by removing the electrical plug from the wall outlet.
- DO NOT use appliance for any application other than its intended use.
- DO NOT store any item on top of this unit when in operation.
- DO NOT allow this unit to touch or to be covered by flammable material such as curtains, draperies, walls, etc. when in operation.
- DO NOT clean with metal scouring pads, as pieces can break off and touch electrical components, heightening the risk of electrical shock.
- Avoid scratching the surface or nicking the edges of this unit.
- Note that the use of accessories not recommended by the manufacturer may result in injury.
- Children should be supervised to ensure that they DO NOT play with the unit.
- This appliance is not intended for use by persons (including children) with reduced physical, sensory, or mental capabilities, or lack of experience and knowledge, unless a person responsible for their safety has given them supervision or instruction concerning use of the appliance.

Save these instructions for future reference.

Parts Identification

177PPC22

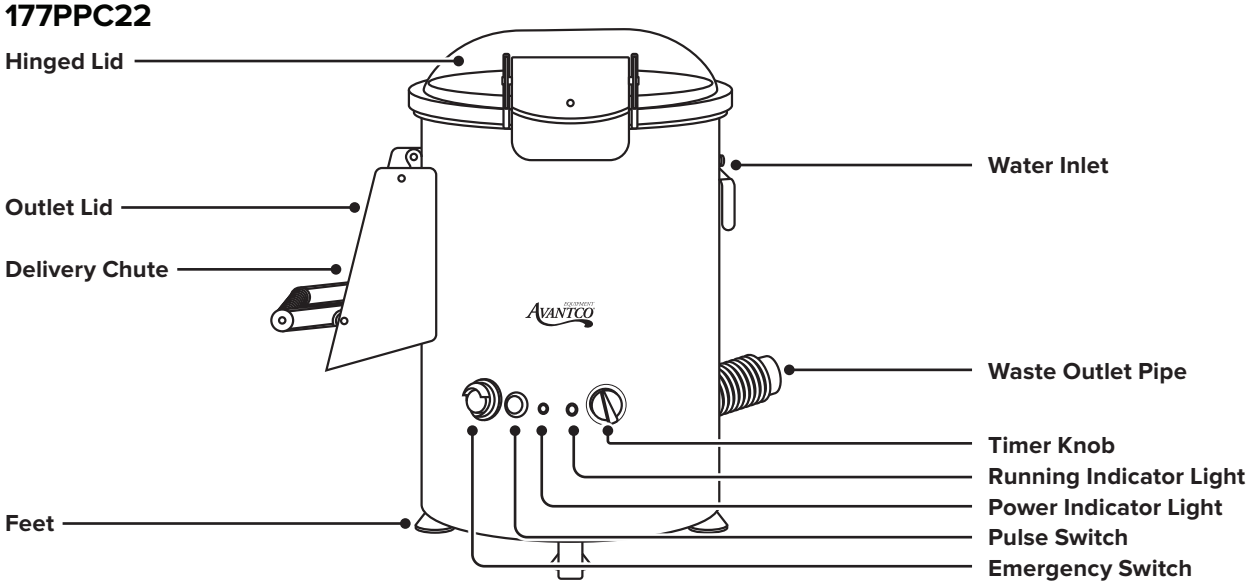

177PPF40

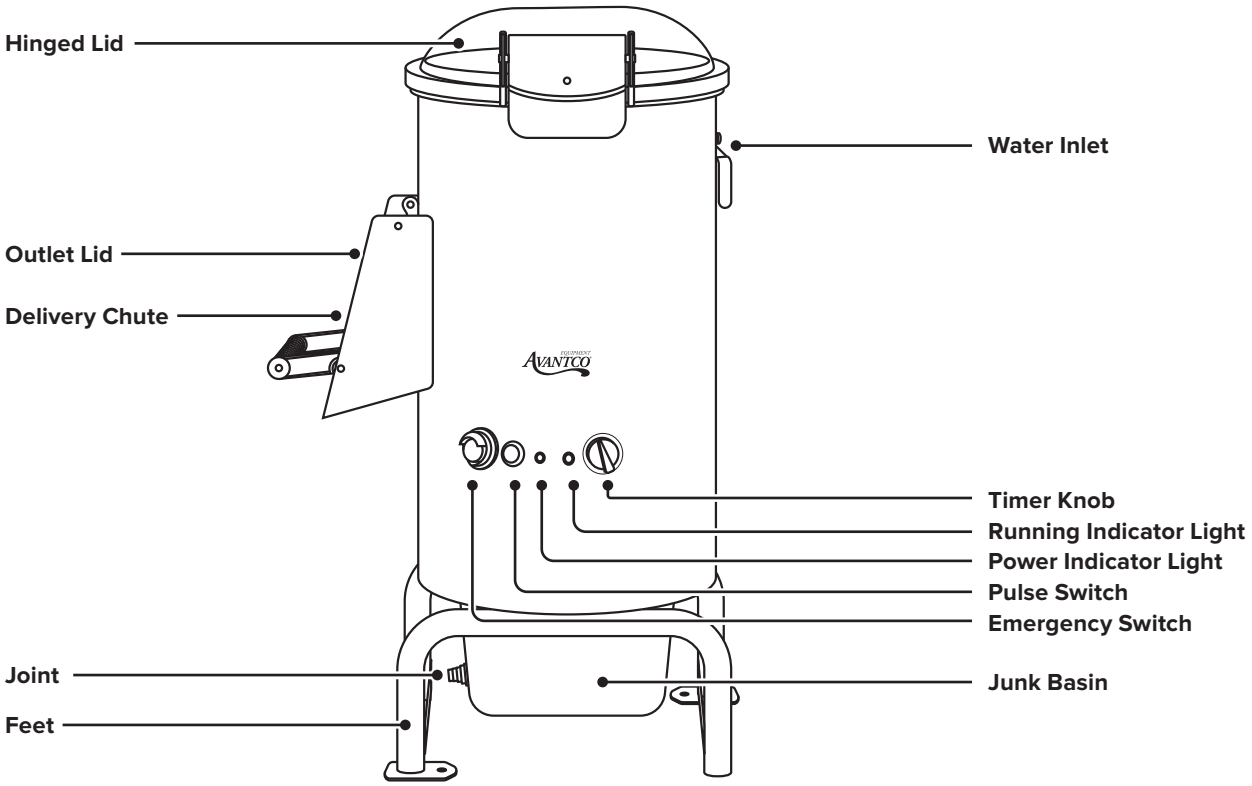

Installation

Placement

- The machine should be placed on a level, steady surface.
- The work area should be sufficiently lit and close to both an electrical outlet and water source.
- Ensure there is enough space around and above the unit so it can be easily operated and allow for ventilation.
- Position the appliance in a way so the controls and plug are always accessible.

Electrical Connection

⚠ CAUTION

- **Electrical connection to the power outlet should be operated by skilled personnel.**
- Ensure that the outlet you plan to use is properly grounded and operating without issue.
- Ensure that the line voltage (V) and frequency (Hz) correspond to the unit's electrical ratings. This information can be found on the serial plate and wiring diagram (page 8).

Water & Discharge Connection

1. Connect to the water supply by means of the supplied hose (59") and ¾" couplings:
   a. Connect the hose to the inlet at the back side of the machine. (Fig. 1A)
   b. Connect the other end of the hose to the water supply. (Fig. 1B)
2. Connect drainage system:
   a. For countertop models: Extend the waste outlet pipe and direct into a bucket, sink, or other waste collection area.
   b. For floor models: Use a hose clamp to affix a drain hose to the joint of the discharge pan. Place the other end of the hose in a bucket, sink, or other waste collection area. (Fig. 2)
   NOTE: Drain hose and hose clamp are sold separately.

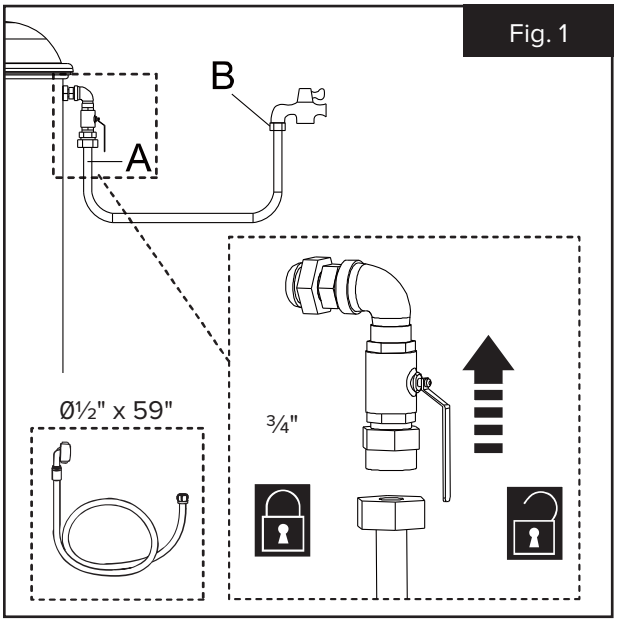

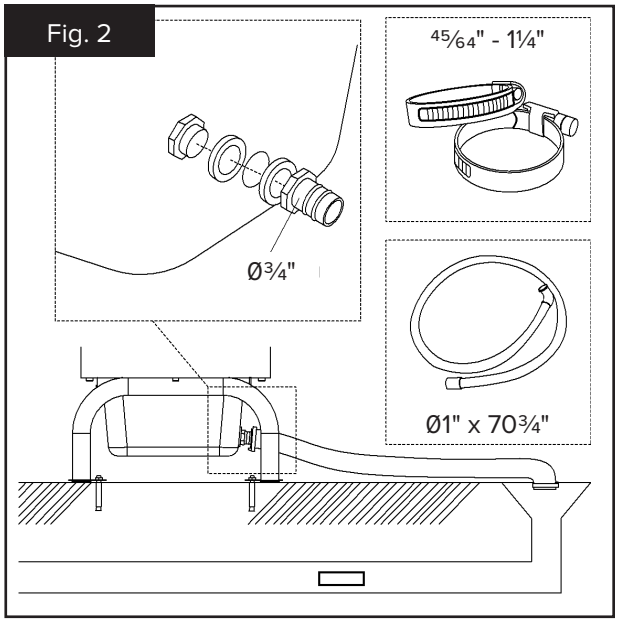

Controls

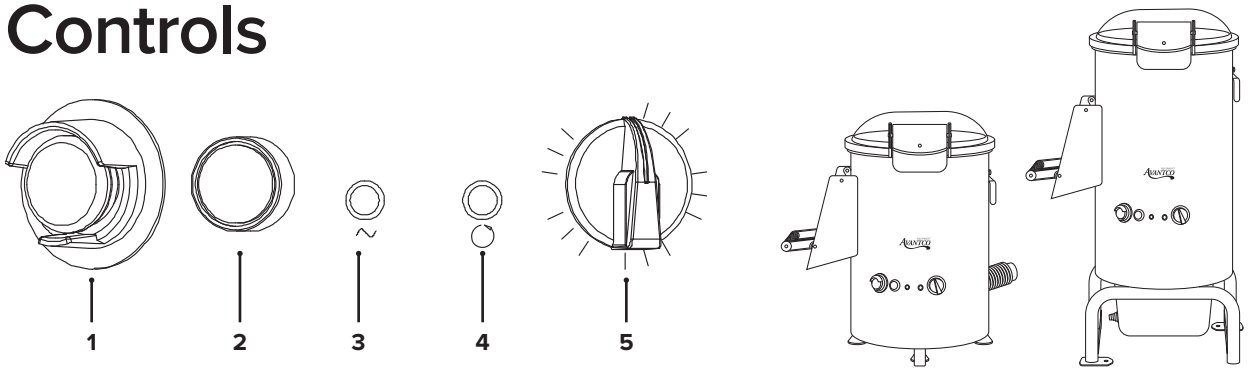

1	Emergency OFF Button	Immediately turns unit off. Only use in safety emergencies.
2	Pulse Button	Used at end of cycle to discharge the peeled product.
3	Power Indicator Light	Illuminates when unit is plugged in.
4	Running Indicator Light	Illuminates when the unit is running.
5	Timer Knob	Sets the operating time for the machine (up to 5 minutes). When the time is reached, the unit stops operating and the ON indicator light will turn off.

Operation

⚠ CAUTION

- **DO NOT put your hand inside the outlet door to help products come out of the unit. If there is any accident, or an accident is about to occur, press the emergency stop button immediately.**

1. Open the hinged lid by pulling the handle until it clicks open.
2. Insert the peeling disk and load the tank with the product to be processed.
   NOTE: DO NOT exceed the maximum weight of each unit.
3. Lock the lid and make sure the outlet door / delivery chute is closed and locked.
   NOTE: There is a micro switch in the lid that will not allow the machine to run if the lid is open.
4. Plug the unit into the wall outlet. The power indicator light will illuminate.
5. Start the machine by turning the timer knob to the desired cycle length. The running indicator light will illuminate. Ensure rinsing water is flowing in from the water inlet.
6. When the cycle has completed, the unit will automatically stop. The running indicator light will go out.
7. Check the product through the top lid to ensure it is fully peeled. If it's not, repeat steps 5 and 6 until desired result is achieved.
8. Place a container below the delivery chute before emptying product.
9. Hold the outlet door open and press the pulse button to empty the tank of the product.
10. Repeat as necessary.
11. Clean the unit immediately after use.

Cleaning & Maintenance

WARNING

DISCONNECT THE MACHINE FROM THE POWER SOURCE BEFORE CLEANING.

- If the unit has not been used for some time, it is recommended that it is cleaned before use.
- DO NOT clean the machine with steel wool, strong chemicals, or abrasive/toxic detergents, as they may damage the machine and/or pose a health hazard.
- DO NOT use high pressure water jets or extremely hot water.
- DO NOT put the peeling plate in the dishwasher.
- It is recommended to remove the peeling plate and check the waste outlet pipe for blockage after each operating cycle.

1. Set the timer to 0, ensuring the running indicator light is off.
2. Unplug the unit from the wall outlet and let cool completely.
3. Turn off water supply and disconnect hose from unit.
4. Open the upper lid and remove the peeling plate from the chamber.
   NOTE: If the cap nuts are difficult to remove, use two wrenches: one to hold the jam nuts and the other to loosen the cap nuts.
5. Clean the peeling plate and chamber thoroughly with warm water, mild detergent, and a soft-bristled brush.
   a. Remove the (14) M5 cap nuts and M5 nuts and take the M5x25 bolts out of the plate.
   b. Remove the (4) M6x25 external hexagon screws.
   c. Remove the punched plate and use a brush to clean.
   d. Replace the punched plate and reinstall all the accessories that were previously taken out.

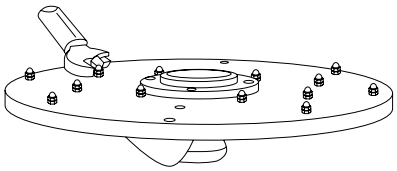

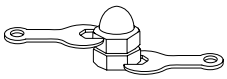

6. Clean the upper lid (including gasket), delivery chute, and waste basin thoroughly after each use with warm water, mild detergent, and a clean cloth.
7. Rinse with clear water.
8. Dry with a soft dry cloth.
9. Check the waste outlet pipe for blockage and clear as necessary.
10. Wipe the outside of the machine with a soft damp cloth and mild detergent as necessary.
11. Ensure all parts are dry before reassembly and storage.

Storage

- Fully clean all parts of the machine and allow to completely dry before storage.
- Unplug the appliance, disconnect from the water supply, and discharge outlet hose.
- Store the appliance in a dry, protected environment at room temperature and out of the reach of children.
- Keep the upper lid open to avoid smell or mold development.
- To protect the appliance from dust, cover it with a cloth that allows air circulation inside the appliance.

Troubleshooting

Problem	Possible Cause	Solution
Peeling disc does not spin when timer is set.	Unit unplugged.	Ensure the plug is securely set in the outlet.
	Improper voltage.	Check that the outlet matches the unit's power requirements.
	Lid is not fully closed	Close the lid fully. A micro switch will prevent the unit from operating with the lid open.
	Emergency stop button is enabled.	Spin the emergency stop button clockwise as indicated to reset, then follow the operating instructions again.
	Overload protection tripped.	Press the reset button by the power cord.
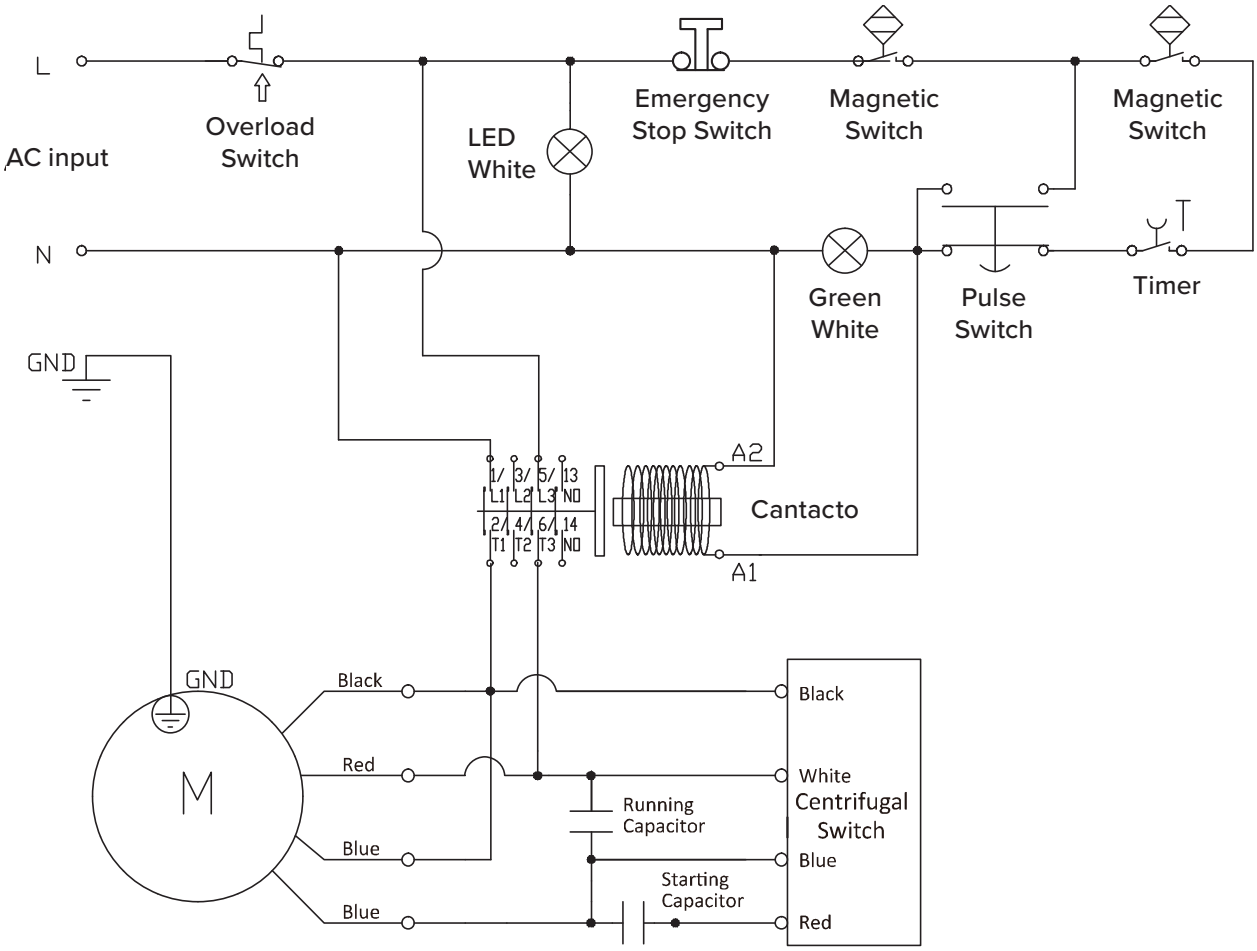
Circuit Diagram